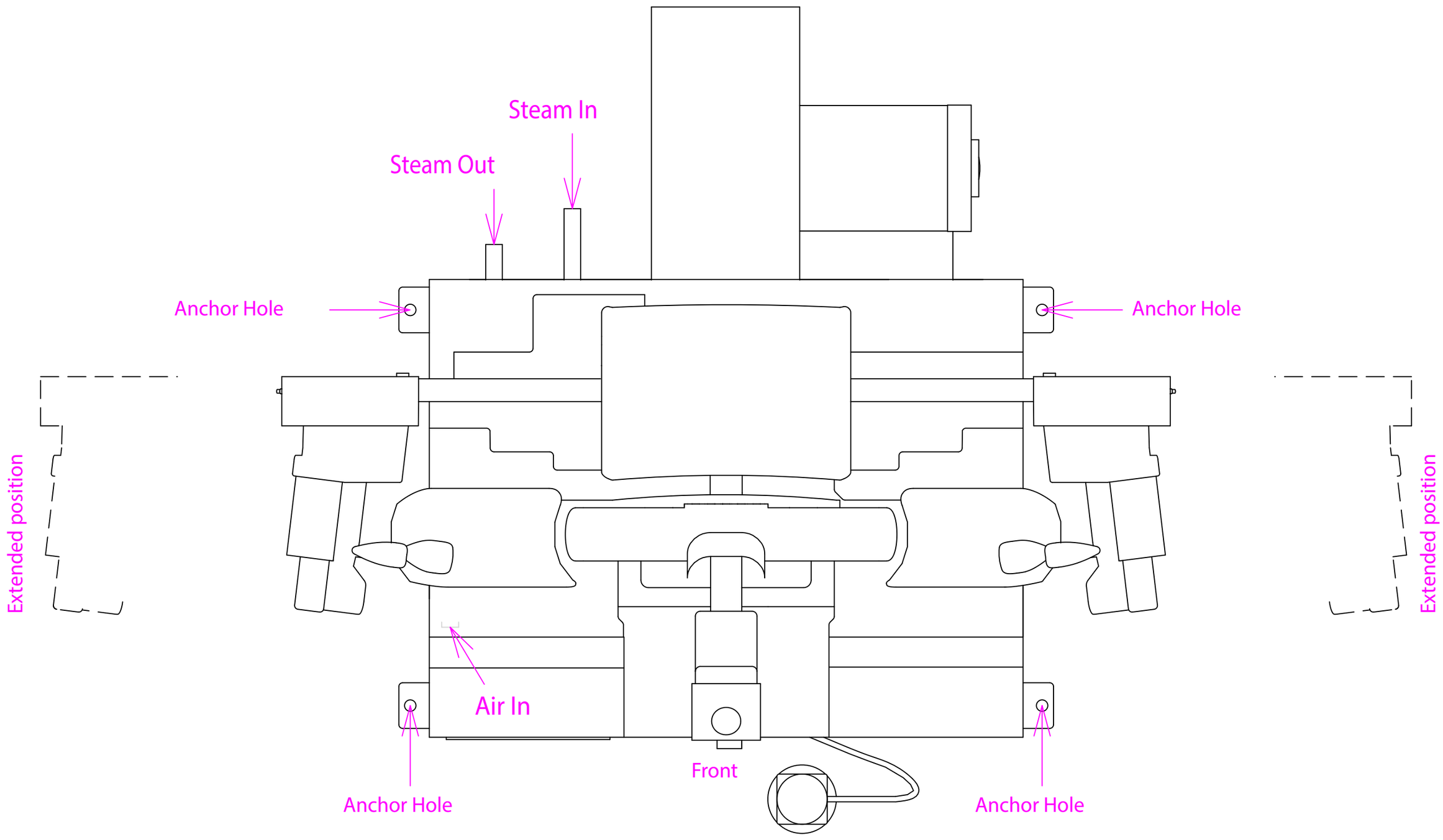
Steam In
Steam Out
Anchor Hole
Anchor Hole
Extended position
Extended position
Air In
Front
Anchor Hole
Anchor Hole